CPZ275

3 PHASE/1500RPM

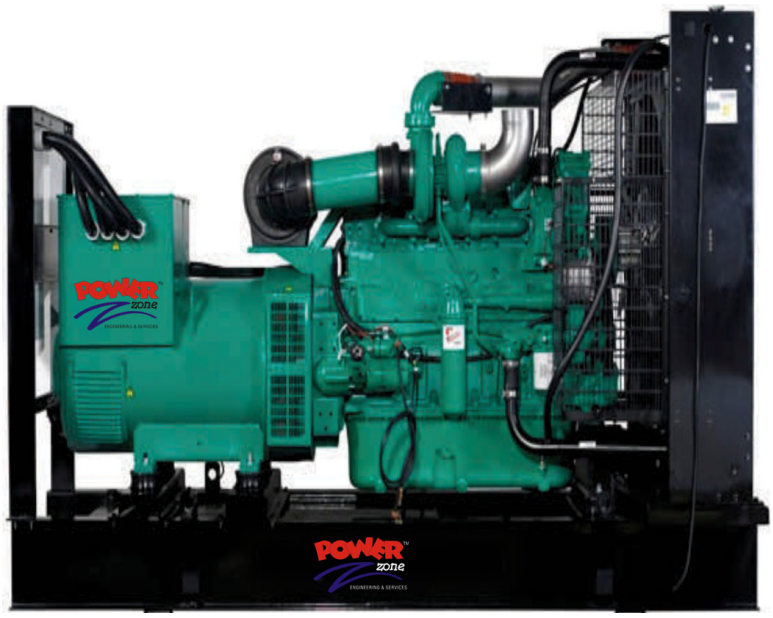

Image for illustrative purposes only..

GENERATING SET MODEL (CPZ275)

1500 rpm (50 Hz Ratings)

Gross Engine Output		Typical Generator Set Output			
Standby	Prime	Standby (ESP)		Prime (PRP)	
kWm/BHP		kWe	kVA	kWe	kVA
254/340	231/310	220	275	200	250

General Engine Data

Engine Model	6LTAA8.9-G2
Type	4 cycle, in-line, Turbo Charged, Air-cooled
Bore mm	140mm
Stroke mm	152mm
Displacement Litre	14 litre
Cylinder Block	Cast iron, 6 cylinder
Battery Charging Alternator	70 amps
Starting Voltage	24 volt, nagative ground
Fuel System	Direct injection
Fuel Filter	Spin-on fuel filters with water separator
Lube Oil Filter Type(s)	Spin-on full flow filter
Lube Oil	38.6 ltr

Coolpac Performance Data

Cooling System Design	Air-Air Charged Cooled
Coolant Ratio	50% ethylene glycol; 50% water
Coolant Capacity (l)	61 Ltr
Limiting Ambient Temp.(°C)**	50
Air Cleaner Type (Normal Duty)	Light duty dry replaceable element with restriction indicator

** @ 13 mm H^20 at 100% Prime

Fuel Consumption 1500 (50 Hz)

%	kWm	BHP	L/ph	US gal/h
Standby Power				
100	241	323	59	15.5
Prime Power				
100	220	295	53	14.1
75	165	221	40	11
50	110	175	26.5	7.1
25	55	74	13.25	3.5

ALTERNATOR DATA

Make	Stamford / Leroy Somer
Model	UCDI274K / TAL046D
No. of bearings	1
Insulation class	H
Wires	12
Ingress Protection	IP23
Excitation System	SELF
Winding Pitch	2/3
AVR Model	SX440
Overspeed	2250 mn^{-1}
Voltage Regulation (steady)	± 1%

CONTROL PANEL

Make	Deep Sea
Model	7000 SERIES

The **DSE 7000 Series** is an Auto Start Control Module for single genset applications. It includes a backlit LCD display which clearly shows the status of the engine all the times. This module can either be programmed using the front panel or by using the DSE configuration suite PC software.

STANDARD SPECIFICATIONS CPZ275

Metering and Alarm indications:

- Generator frequency
- Underspeed, Overspeed
- Generator volts (L-L, L-N)
- Generator current
- Engine oil pressure
- Engine coolant temperature
- Fuel level (Warning or shutdown) - Optional
- Hours run counter
- Battery volts
- Fail to start/stop
- Emergency stop
- Failed to reach loading voltage/frequency
- Charge fail
- Loss of magnetic pick-up signal - Optional
- Low DC voltage
- CAN diagnostics and CAN fail/error

1. ENGINE

Cummins four stroke heavy duty high performance industrial type diesel engine.

2. ENGINE FILTRATION SYSTEM

- Cartridge type dry air filter.
- Two Cartridge type fuel filters.
- Full flow lube oil filter.

All filters have replaceable elements.

3. COOLING RADIATOR

Radiator and cooling fan, complete with safety guards, designed to cool the engine at high ambient temperatures (consult your dealer for de-ration factors)

4. EXHAUST SYSTEM

Heavy duty Industrial Exhaust Silencer

Silencer noise reduction level

Maximum allowable back pressure

5. CIRCUT BREAKER TYPE

ABB 3 pole MCCB. (4 pole is optional)

6. FUEL SYSTEM

The baseframe design is incorporated with an integral fuel tank with a capacity of approx. 8 hours running at Full Load. The tank is supplied complete with fill cap breather, fuel feed and return lines to the Engine and drain plug.

7. ALTERNATOR

7.1 INSULATION SYSTEM

- The insulation system is Class H.
- All windings are impregnated in either a triple dip thermosetting liquid, oil and acid resisting polyester varnish or vacuum pressure impregnated with a special polyester resin.
- Heavy coat of antitracking varnish additional protection against moisture or condensation.

7.2 AUTOMATIC VOLTAGE REGULATOR (AVR)

The fully sealed Automatic Voltage Regulator maintains the Voltage Regulation at ±1%. Nominal adjustment by means of a trim pot incorporated on the AVR.

8. MOUNTING ARRANGEMENT

8.1 COUPLING

The Engine and Alternator are directly coupled by means of an SAE flange. The Engine flywheel is flexibly coupled to the Alternator rotor.

8.2 ANTI-VIBRATION MOUNTING PADS

Anti-Vibration pads are affixed between the Engine / Alternator feet and the Baseframe thus ensuring complete vibration isolation of the rotating assembly.

8.3 SAFETY GUARDS

The Fan & Fan Drive along with the Battery Charging Alternator are Safety Guard protected for personnel protection.

9. FACTORY TEST

- The Generating set is load tested before dispatch
- All protective devices control functions and site load conditions are simulated. The generator and it's systems are checked before dispatch.

10. EQUIPMENT FINISHING

All mild steel components are fully degreased and painted with powder coated paint to ensure maximum scuff resistance and durability.

11. DOCUMENTATION

Operation & Maintenance manual, Circuit wiring diagrams and Commissioning / Fault Finding instruction leaflets are accompanied with the Generator.

12. QUALITY STANDARDS

The equipment meets the following standards: BS4999, BS5000, BS5514 IEC 60034, VDE0530, NEMA MG 1.22 and ISO 8528.

13. WARRANTY

All of the Generating Sets are covered under a warranty policy for a period of 24 months. Warranty of the equipment is in line with manufacturers warranty terms & conditions.

(check warranty statement for more details, as it may vary for different countries)

In line with continuous product development, we reserve the right to change specifications without notice.

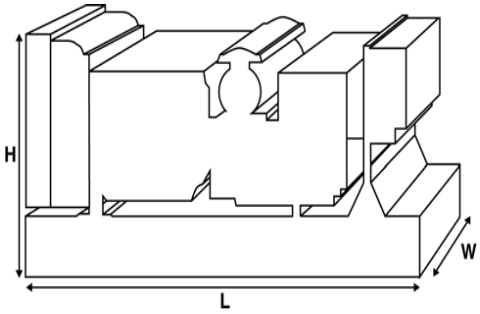

STANDARD REFERENCE CONDITIONS

Rating Definitions

Prime Power: Variable load. Unlimited hours usage with an average load factor of 80% of the published prime power over each 24 hour period. A 10% overload is available for 1 hour in every 12 hours of operation.

Standby Power: Variable load. Limited to 500 hours annual usage, up to 300 hours of which my be continuous running. No overload is permitted.

Dealer contact details:

POWER zone™
Engineering & Services

1P, 1KM, Defence Off Raiwind Road,Bhubtian Chowk, Lahore.

www.powerzone.com.pk

info@powerzone.com.pk

UAN: (042) 111-111-087

Office# 7&8, 1st Floor, Block 76-E, Hill View Plaza, Jinnah Avenue, Sector G-7 & F-7, Blue Area, Islamabad.

UAN: (051) 111-111-087